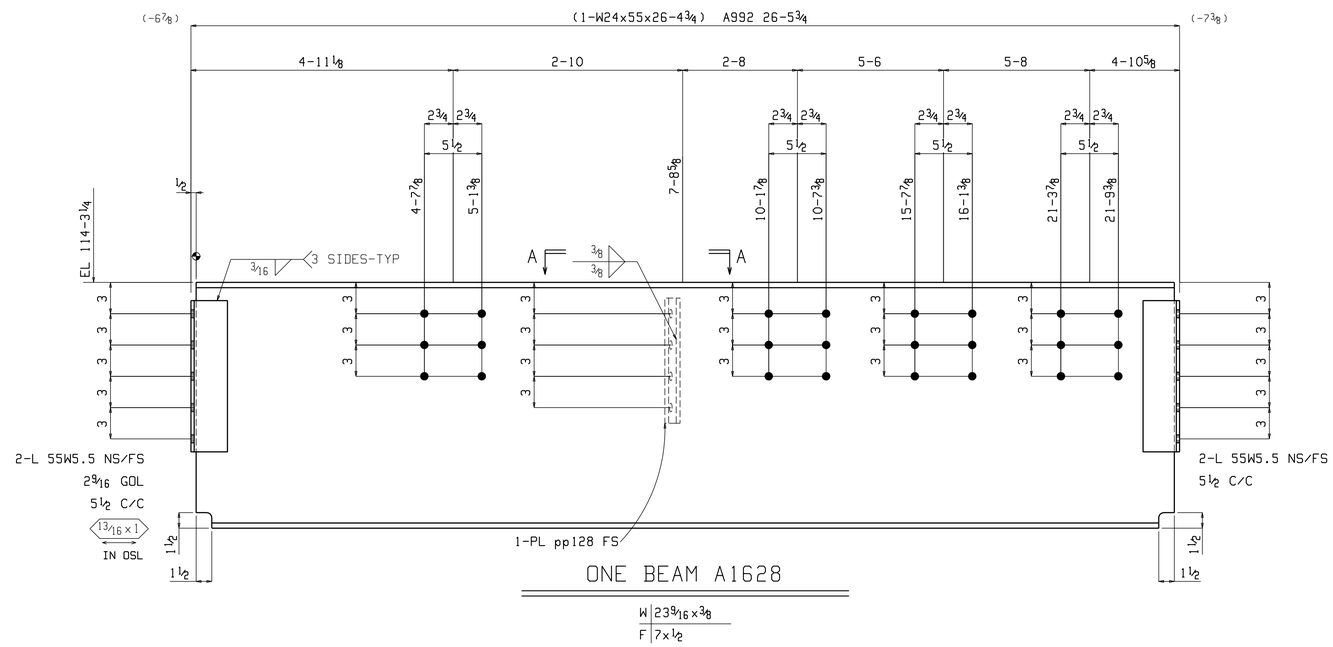


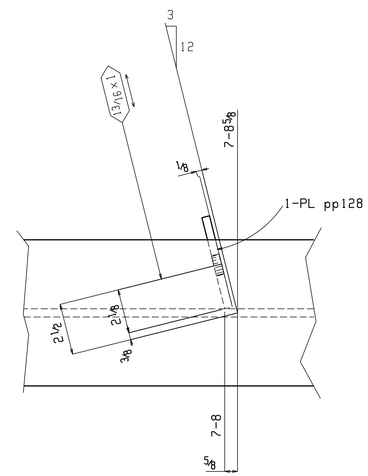


Section A-A

A1628

## BILL OF MATERIAL

| Piece Mark | Quantity Total | Description | Length | | Steel Grade | Remarks | Sequence Numbers | Sequence Quantity |
|---|---|---|---|---|---|---|---|---|
| A1628 | ONE | BEAM | | | | | 24 | 1 |
| ww729 | 1 | W24x55 | 26 | 4¾ | A992 | | | |
| 55W5.5 | 4 | L4x3½x5/16 | 1 | 2½ | A36 | | | |
| pp128 | 1 | PL⅜x4½ | 1 | 0 | A36 | | | |
| | | | | | | | | |
| | | FIELD BOLTS | | | | | | |
| | 10 | TC¾ Dia A325N | 0 | 3¼ | | 1HD WASH | | |
| | 10 | TC¾ Dia A325N | 0 | 2¾ | | 1HD WASH | | |

MATERIAL ASTM A36 U.O.N.

HOLES U.O.N. 13/16 ∅

SURFACE PREP SSPC-SP-3

SHOP FINISH NO PAINT

SHOP PLACE PIECE MARK ON LEFT HAND END OF MEMBER. ERECT MEMBER WITH PIECE MARK TO END SHOWN ON PLACEMENT PLAN

| DATE | REV | DESCRIPTION |
|---|---|---|
| | | |

SUBJECT BEAMS - SEQ. 24

PROJECT

LOCATION DAYTON, OHIO

CUSTOMER

DESIGNED BY

DESIGN/ERECTION DWG REF S3.2/E20

| DRAWN BY | DATE | CHECKED BY | DATE |
|---|---|---|---|
| GRM | 10-19-04 | JFS | 12-3-04 |

Job No. 1574

Sheet No. 1628