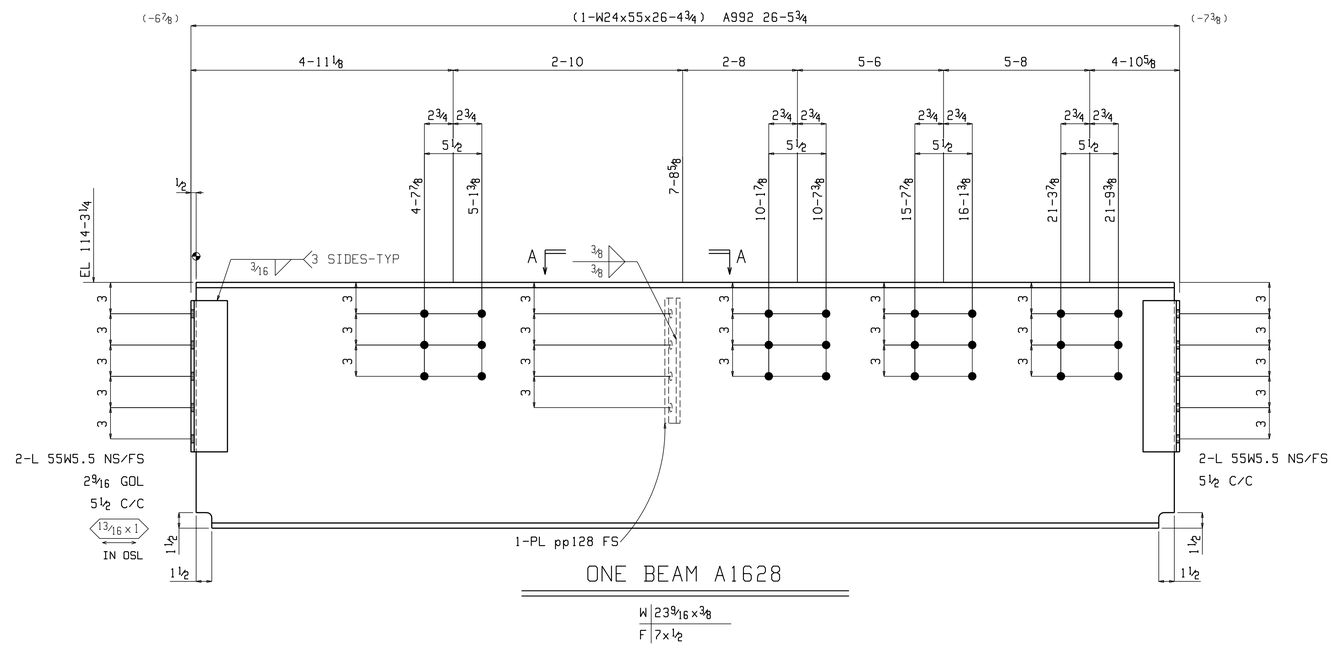

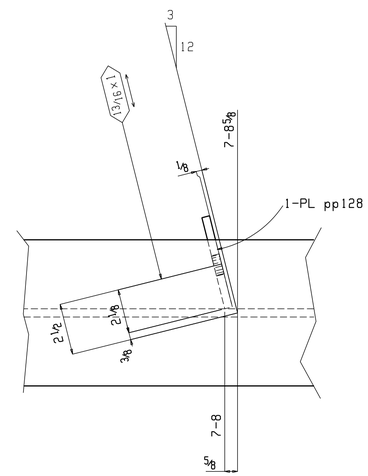

Section A-A

A1628

BILL OF MATERIAL

Piece Mark	Quantity Total	Description	Length		Steel Grade	Remarks	Sequence Numbers	Sequence Quantity
A1628	ONE	BEAM					24	1
ww729	1	W24x55	26	4¾	A992			
55W5.5	4	L4x3½x5/16	1	2½	A36			
pp128	1	PL⅜x4½	1	0	A36			
		FIELD BOLTS						
	10	TC¾ Dia A325N	0	3¼		1HD WASH		
	10	TC¾ Dia A325N	0	2¾		1HD WASH		

MATERIAL ASTM A36 U.O.N.

HOLES U.O.N. 13/16 ∅

SURFACE PREP SSPC-SP-3

SHOP FINISH NO PAINT

SHOP PLACE PIECE MARK ON LEFT HAND END OF MEMBER. ERECT MEMBER WITH PIECE MARK TO END SHOWN ON PLACEMENT PLAN

DATE	REV	DESCRIPTION

SUBJECT BEAMS - SEQ. 24

PROJECT

LOCATION DAYTON, OHIO

CUSTOMER

DESIGNED BY

DESIGN/ERECTION DWG REF S3.2/E20

DRAWN BY	DATE	CHECKED BY	DATE
GRM	10-19-04	JFS	12-3-04

Job No. 1574

Sheet No. 1628