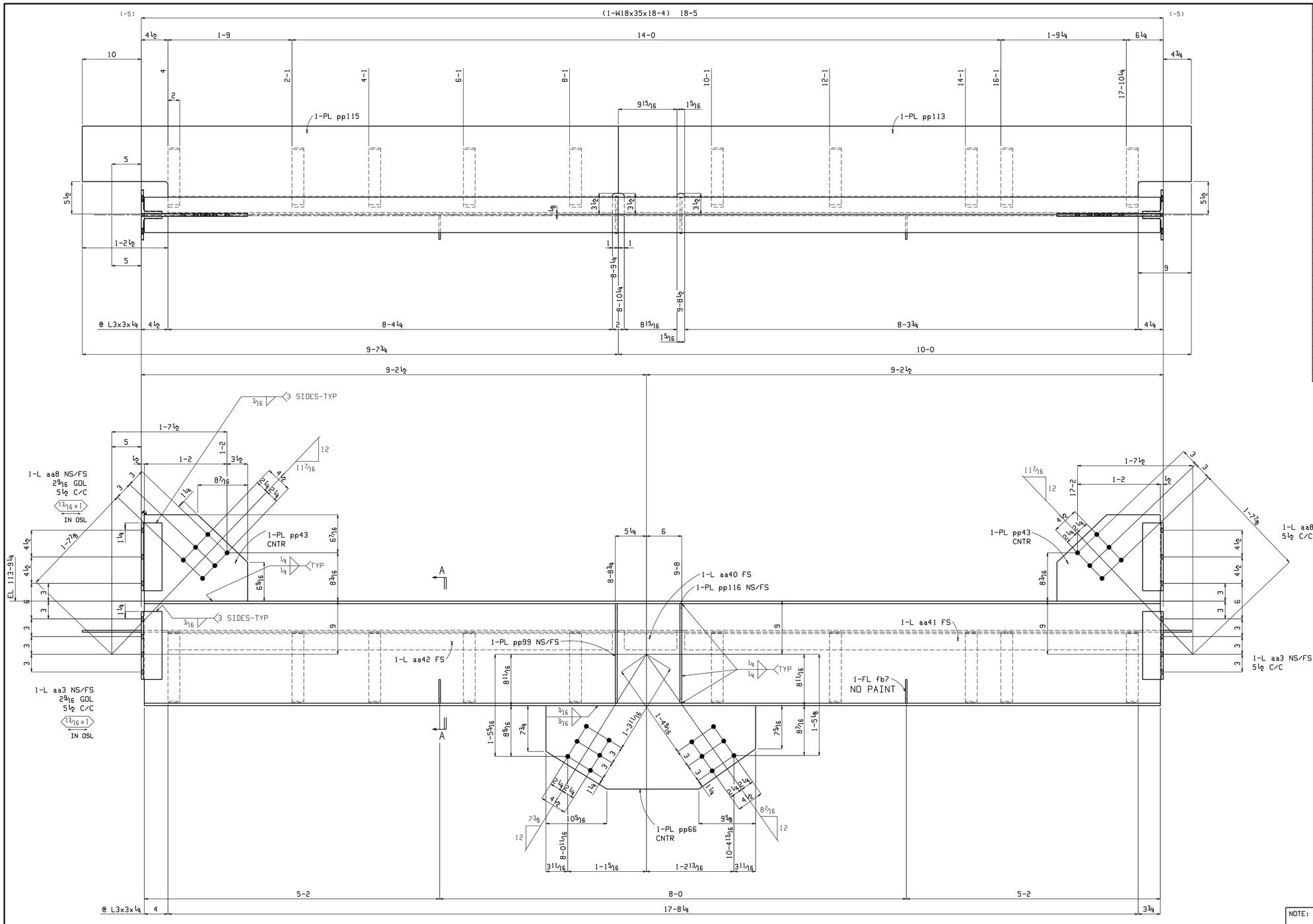

ONE BEAM A147

W | 17 11/16 x 5/16
F | 6x7/16

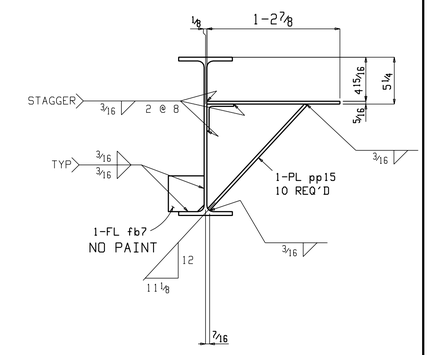

Section A-A

A147

BILL OF MATERIAL

Piece Mark	Quantity Total	Description	Length		Steel Grade	Remarks	Sequence Numbers	Sequence Quantity
A147	ONE	BEAM					2	1
ww2	1	W18x35	18	4	A992			
aa3	4	L4x3 1/2x3/8	0	11 1/2	A36			
aa8	4	L4x3 1/2x3/8	0	11 1/2	A36			
aa42	1	L3x3x1/4	8	4 1/4	A36			
aa41	1	L3x3x1/4	8	3 3/4	A36			
aa40	1	L3x3x1/4	0	8 15/16	A36			
pp43	2	PL 1/2x14 3/8	1	5 1/2	A36			
pp66	1	PL 1/2x14 1/8	2	11 1/2	A36			
pp113	1	PL 5/16x14 7/8	10	0	A36			
pp115	1	PL 5/16x14 7/8	9	7 3/4	A36			
pp99	3	PL 5/16x3	1	4 13/16	A36			
pp116	1	PL 5/16x2 3/4	1	4 13/16	A36			
pp15	10	PL 5/16x2	1	4	A36			
fb7	2	FL 1/4x4	0	4	A36			
		FIELD BOLTS						
	28	TC 3/4 Dia A325N	0	2		1HD WASH		

MATERIAL ASTM A36 U.O.N.	HOLES U.O.N. 13/16 ∅
SURFACE PREP	SSPC-SP-3
SHOP FINISH	STANDARD RED SHOP PRIMER 1.5 MIL.

NOTE: FINAL FOR FAB & CONSTRUCTION

SHOP PLACE PIECE MARK ON LEFT HAND END OF MEMBER. ERECT MEMBER WITH PIECE MARK TO END SHOWN ON PLACEMENT PLAN

DATE	REV	DESCRIPTION
11-04-05	1	REV PER CHK & APPR

SUBJECT	SEQ. 02 BEAM
PROJECT	
LOCATION	JACKSONVILLE, ILLINOIS
CUSTOMER	
DESIGNED BY	
DESIGN/ERECTION DWG REF	S6/E2

DRAWN BY	DATE	CHECKED BY	DATE
WJS/TRJ	10-10-05	JFS	11-2-05

Job No. 1631 | Sheet No. 147