BILL OF MATERIAL

Piece Mark	Quantity Total	Description	Length		Steel Grade	Remarks	Sequence Numbers	Sequence Quantity
A980	ONE	COLUMN					32	1
w839	1	W14x74	12	10	A992	S1E		
pp49	2	PL 3/8x5	1	0 1/2	A572-50			
p170	2	PL 5/8x4 3/4	1	0 1/2	A572-50			
pp47	1	PL 3/8x11 3/4	1	10 9/16	A572-50			
p216	2	PL 3/8x2	0	4 1/2	A36			

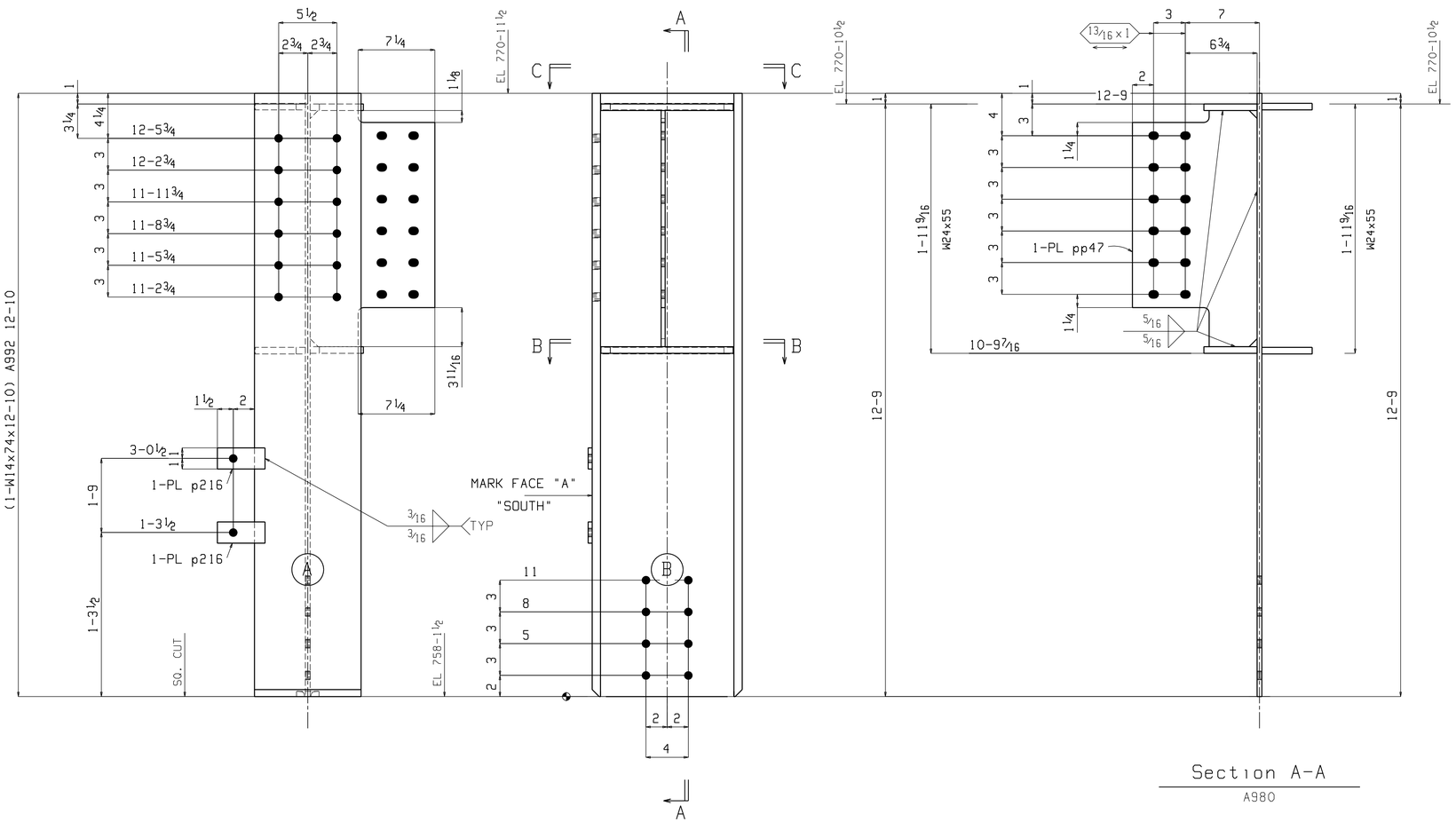

Section A-A

A980

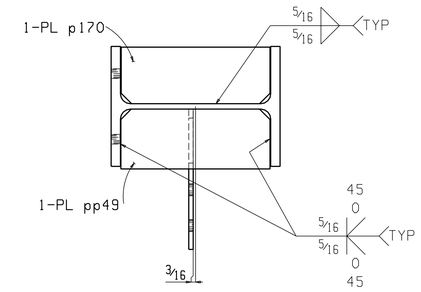

Section C-C

A980

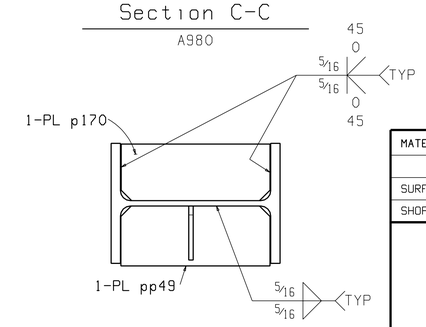

Section B-B

A980

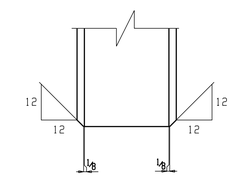

TYP MOMENT PREP

ONE COLUMN A980

B-16

W 14 3/16 x 7/16
F 10 1/16 x 13/16

MATERIAL ASTM A36 U.O.N.	HOLES U.O.N. 13/16 Ø
SURFACE PREP	SSPC-SP-3
SHOP FINISH	NO PAINT

PHONE: (573) 471-2121 FAX: (573) 471-2336

SUBJECT	COLUMN @ SEQ. 32
PROJECT	
LOCATION	UNIVERSITY OF ILLINOIS AT URBANA-CHAMPAIGN
CUSTOMER	
DESIGNED BY	
DESIGN/ERECTION DWG REF	S-111R, E23

DRAWN BY	DATE	CHECKED BY	DATE
TRJ	11-11-04	JFS	1-10-05

Job No. 1539 Sheet No. 980

SHOP PLACE PIECE MARK ON LEFT HAND END OF MEMBER. ERECT MEMBER WITH PIECE MARK TO END SHOWN ON PLACEMENT PLAN

DATE	REV	DESCRIPTION